5.1 CURRENT COLLECTORS

CURRENT COLLECTORS FOR COPPERHEAD RAILS & FIXED WIRES

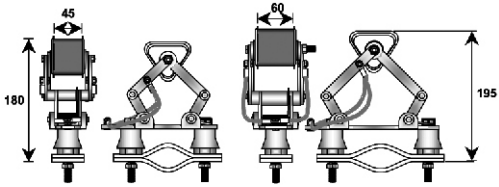

TYPE	CAPACITY A	PICK UP SHOES		WIDTH mm	WEIGHT kg	WORKING HEIGHT	CARBON WIDTH
		Material	Dimensions mm				
DD1	60	Graphite carbon	Δ60x48	95	1.85	150+-25	45
DD	100	Graphite carbon	Δ60x65	105	2.56	145+-40	60

TYPE DA
PANTOGRAPH MEDIUM DUTY

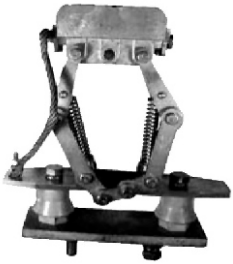

TYPE DSV
SHORT BOOM HEAVY DUTY

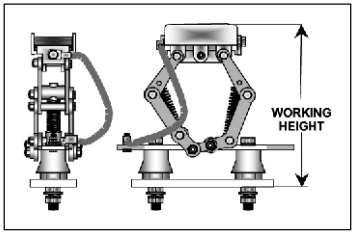

TYPE	AMP	MASS kg	MOUNTING BOLTS Dia x centres	WORK HEIGHT mm	PRESSURE kg	59 x 48 CARBON
DA1	100	3.5	M12 x 85	200 +- 30	4.5	100 x 50 x 20
DA2	200	8.5	M16 x 70	260 +- 45	10.5	140 x 80 x 30
DA4	400	9	M16 x 110	290 +- 55	11.3	140 x 100 x 30
DA8	800	12	M16 x 110	290 +- 55	11.3	140 x 100 x 30
DSV CI	100	12	M16 x 70	280 +- 60	7	CASTIRONSHOE
DSV PH	400	13	M16 x 70	280 +- 60	7	PHOSPHBRONZE

CURRENT COLLECTORS FOR LOOSE WIRE INSTALLATIONS

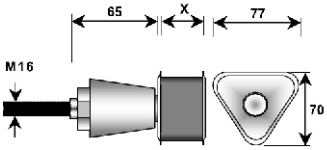

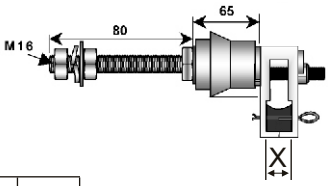

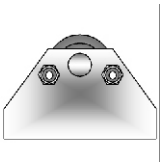

5-BWT2		
CARBON TYPE	**X mm**	**Amp**
A	19.05	45A
B	22.22	52A
C	25.4	60A
D	28.57	67A
E	31.75	76A

TYPE	X mm	Amp
5-BWI3Z	16	64A
5-BWI3U	24	96A
5-BWI3XV	20	80A

5.1 CURRENT COLLECTORS

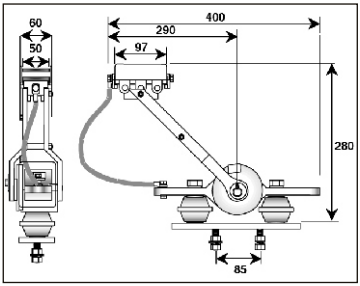

BSV1

Type	5-SCC/100
Capacity	100A
Weight	5.2kg
Mounting bolts	M12x85
Working height	200+-50
Carbon pressure	3.4kg
Carbon size	100x20x50

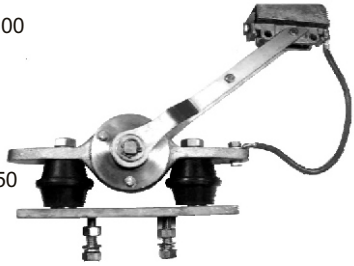

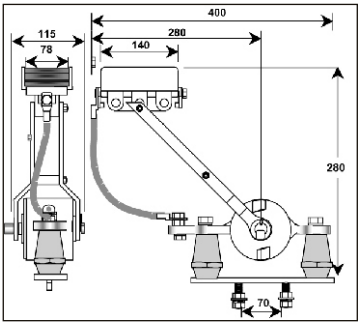

BSV2

Type	5-SCC/200
Capacity	200A
Weight	9.3kg
Mounting bolts	M16x110
Working height	250+-60
Carbon pressure	7kg
Carbon size	140x80x30

Also available with bronze shoe for earthing purposes.

BSV2x2

Type	5-SCC/200-2
Capacity	400A
Weight	11.2kg
Mounting bolts	M16x110
Working height	250+-60
Carbon pressure	7kg
Carbonsize	2x140x80x30

Also available with bronze shoe for earthing purposes.

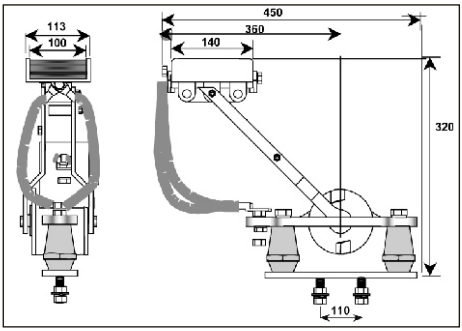

BSV4

Type	5-SCC/400
Capacity	400A
Weight	11.72kg
Mounting bolts	M16x110
Working height	280+-60
Carbon pressure	8kg
Carbon size	140x100x30

Also available with bronze shoe for earthing purposes.

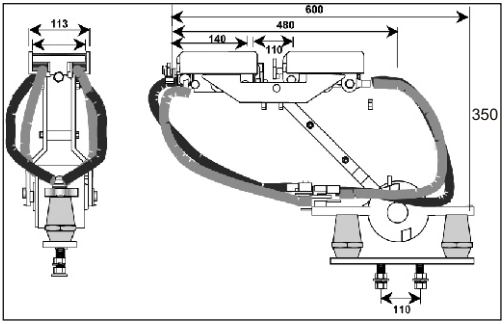

BSV8

Type	5-SCC/800
Capacity	800A
Weight	15.34kg
Mounting bolts	M16x110
Working height	280+-60
Carbon pressure	8kg
Carbon size	140x100x30

Note: Type 5-SCC/1600 also available, c/w 4 carbon brushes

5.1 CURRENT COLLECTORS

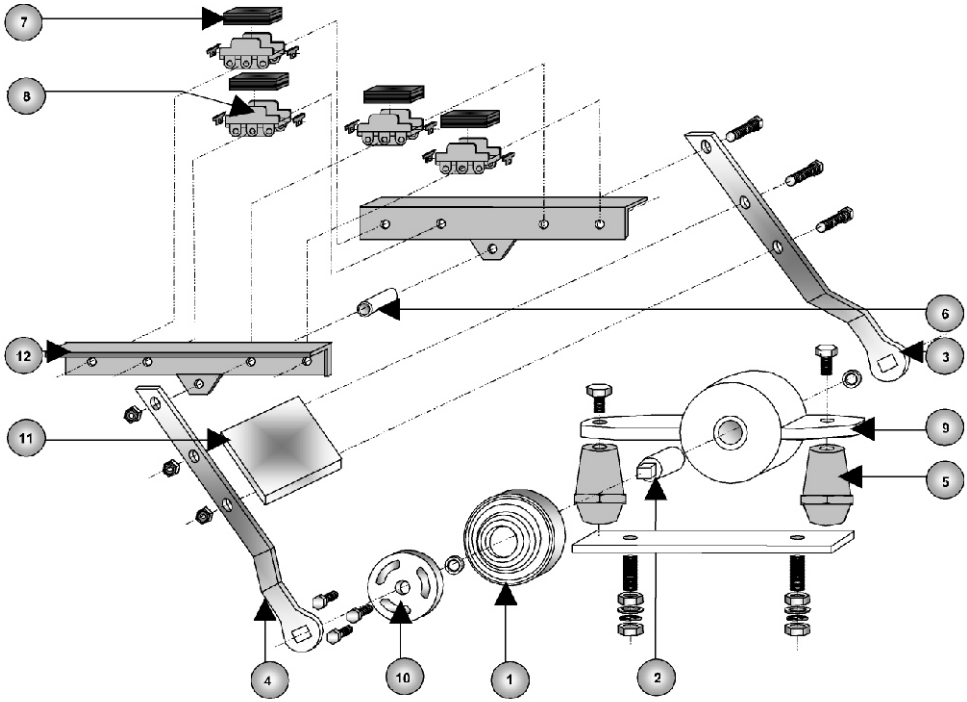

NR	DESCRIPTION	5-SCC/100	5-SCC/200	5-SCC/400	5-SCC/800	5-SCC/1600
1	Collector spring	5-SCC/100-1	5-SCC/200-1	5-SCC4/00-1	5-SCC/800-1	5-SCC/1600-1
2	Spring bolt	5-SCC/100-2	5-SCC/200-2	5-SCC/400-2	5-SCC/800-2	5-SCC/1600-2
3	Arm Right	5-SCC/100-3	5-SCC/200-3	5-SCC/400-3	5-SCC/800-3	5-SCC/1600-3
4	Arm Left	5-SCC/100-4	5-SCC/200-4	5-SCC/400-4	5-SCC/800-4	5-SCC/1600-4
5	Insulators	5-SCC/100-5	5-SCC/200-5	5-SCC/400-5	5-SCC/800-5	5-SCC/1600-5
6	Spacer tubes (set)	5-SCC/100-6	5-SCC/200-6	5-SCC/400-6	5-SCC/800-6	5-SCC/1600-6
7	Carbon brush	5-SCC/100-7	5-SCC/200-7	5-SCC/400-7	5-SCC/800-7	5-SCC/1600-7
8	Carbon holder	5-SCC/100-8	5-SCC/200-8	5-SCC/400-8	5-SCC/800-8	5-SCC/1600-8
9	Spring housing	5-SCC/100-9	5-SCC/200-9	5-SCC/400-9	5-SCC/800-9	5-SCC/1600-9
10	Spring housing lid	5-SCC/100-10	5-SCC/200-10	5-SCC/400-10	5-SCC/800-10	5-SCC/1600-10
11	Spacer block				5-SCC/800-11	5-SCC/1600-11
12	Support bracket				5-SCC/800-12	5-SCC/1600-12
13	Leads	5-SCC/100-13	5-SCC/200-13	5-SCC/400-13	5-SCC/800-13	5-SCC/1600-13

5.2 STEEL-COPPERHEAD RAILS

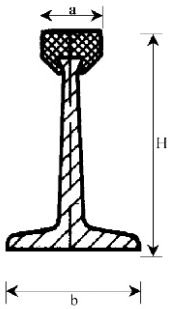

TYPE	COPPER CROSS SECTION Sq mm	STEEL CROSS SECTION Sq mm	EQUIVAL TOTAL COPPER CON-DUCTOR Sq mm	H mm	a mm	b mm	WEIGHT Kg/m	MAX CONTIN - UOUS AMPS
5-RC20/ 14	14	150	36	31	6.5	20	1.24	220
5-RC20/ 25	25	150	47	33	8	20	1.34	256
5-RC20/ 50	50	150	72	34	10	20	1.57	327
5-RC20/100	100	150	122	38.5	12	20	2.02	444

Standard lengths: 7m

Main application: Conductor system for hoists and monorails, down-shop and cross travel supply for lightcranes.

Best applicable collectors: DD1, DD and DA

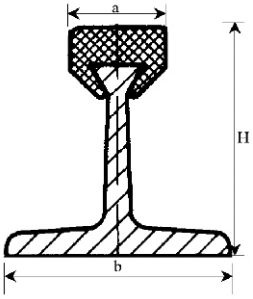

TYPE	COPPER CROSS SECTION Sq mm	STEEL CROSS SECTION Sq mm	EQUIVAL TOTAL COPPER CON-DUCTOR Sq mm	H mm	a mm	b mm	WEIGHT Kg/m	MAX CONTIN - UOUS AMPS
5-RC35/ 30	30	265	69	32	14.2	35	2.34	320
5-RC35/ 50	50	265	89	33.1	14.6	35	2.52	410
5-RC 35/100	100	265	139	36.0	15.3	35	2.97	529
5-RC 35/150	150	265	189	38.3	17.3	35	3.42	632
5-RC 35/200	200	265	239	40.8	17.3	35	3.87	724

Standard lengths: 7m

Main application: Conductor system for heavy monorails, down-shop and cross travel supply for medium duty cranes.

Best applicable collectors: 5-SCC/100,5-SCC/200,5-SCC/400,5-SCC/800

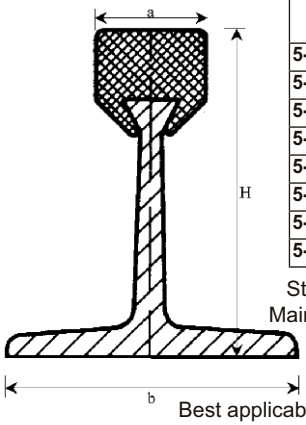

TYPE	COPPER CROSS SECTION Sq mm	STEEL CROSS SECTION Sq mm	EQUIVAL TOTAL COPPER CON-DUCTOR Sq mm	H mm	a mm	b mm	WEIGHT Kg/m	MAX CONTIN - UOUS AMPS
5-RC45/ 50	50	355	102	43.1	14.6	45	3.23	495
5-RC45/100	100	355	152	46.0	15.3	45	3.68	620
5-RC45/150	150	355	202	48.3	17.3	45	4.13	728
5-RC45/200	200	355	252	50.8	17.3	45	4.58	826
5-RC45/300	300	355	452	56.3	17.6	45	5.48	1000
5-RC45/400	400	455	452	59.3	19.6	45	6.38	1156
5-RC45/500	500	355	552	64.3	19.6	45	7.28	1299
5-RC45/600	600	355	652	65.0	23.2	45	8.18	1432

Standard lengths: 7m

Main application: Down-shop and cross travel supply for heavy cranes, loading bridges, coking machinery, rapid transit systems etc.

Best applicable collectors: 5-SCC/100,5-SCC/200,5-SCC/400,5-SCC/800

5.3 COPPERHEAD RAIL ACCESSORIES

Expansion joint gap = 19mm @ 25° C

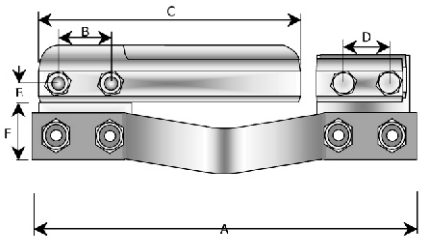

EXPANSION SECTION							
PART NUMBER	A	B	C	D	E	F	Noof Leaves
5-XJ35/50	240	30	160	30	13	43	4
5-XJ35/100	240	30	160	30	13	43	8
5-XJ35/150	240	30	160	30	13	43	13
5-XJ35/200	240	30	160	30	13	43	17
5-XJ45/50	240	30	160	30	18	50	8
5-XJ45/100	240	30	160	30	18	50	8
5-XJ45/150	240	30	160	30	18	50	8
5-XJ45/200	240	30	160	30	18	50	17
5-XJ45/300	240	30	160	30	18	50	17
5-XJ45/400	240	30	160	30	18	50	17
5-XJ45/500	240	30	160	30	18	50	17
5-XJ45/600	240	30	160	30	18	50	50
5-XJ45/800	240	30	160	30	18	50	50
5-XJ45/1600	240	30	160	30	18	50	50

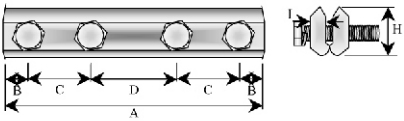

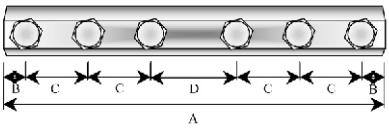

RIGID JOINTS						
PART NUMBER	A	B	C	D	H	I
5-RJ20/14-100/4	100	12	20	35	26	4
5-RJ35/30-200/6	190	15	30	40	25	8
5-RJ45/50-200/6	190	15	30	40	33	7.5

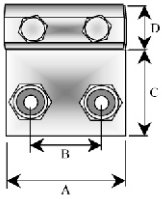

FEEDER CLAMP				
PART NUMBER	A	B	C	D
5-FC35/30-300	61	30	43	23.5
5-FC45/50-200	60	30	40	35
5-FC45/300-800	60	30	40	35

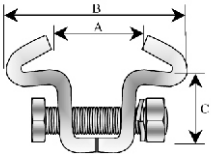

LOCATINGCLAMPS			
PART NUMBER	A	B	C
5-LCP20	18	44	43
5-LCP35	18	44	40
5-LCP45	18	44	40

5.3 COPPERHEAD RAIL ACCESSORIES

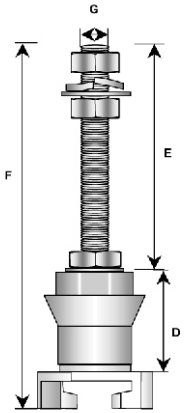

5-IGP20

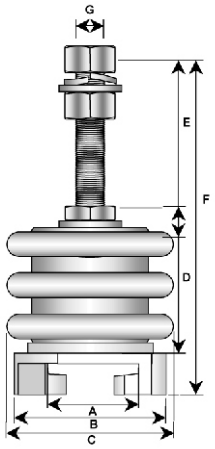

5-IGP35 and 5-IGP45

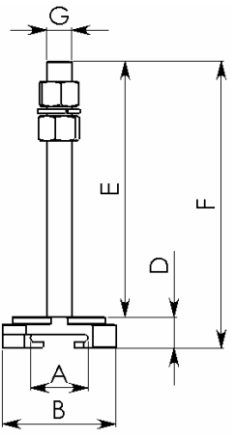

Earth Rail Support
5-IGP35E 5-IGP45E

INSULATORS							
PART NUMBER	**A**	**B**	**C**	**D**	**E**	**F**	**G**
5-IGP20	22	50	32	69	94	163	M12
5-IGP35	37	73	80	55	90	180	M16
5-IGP45	54	87	80	55	90	180	M16

High heat to 550°C ceramic insulators						
5-IGP35HT	37	73	80	55	90	180
5-IGP45HT	54	87	80	55	90	180

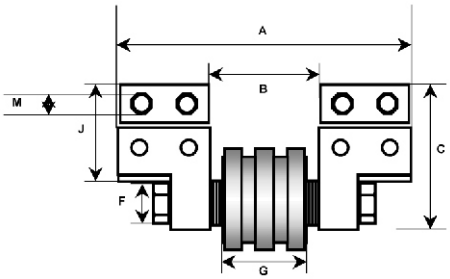

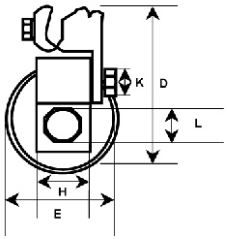

HOSPITAL BAY INSULATOR													
Part Number	**A**	**B**	**C**	**D**	**E**	**F**	**G**	**H**	**I**	**J**	**K**	**L**	**M**
5-HBI/35	190	70	100	120	80	36	55	35	120	62	M10	M16	M8
5-HBI/45	200	76	105	130	80	32	50	40		74	M10	M16	M10

Rail gap = 10 mm

5.4 INSTALLATION OF COPPERHEAD RAIL

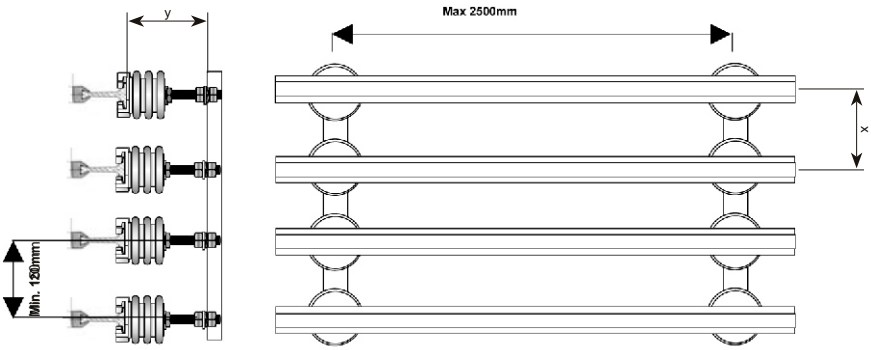

Fig. A

1. Install mounting brackets to I beam or girder, either vertically as Fig. A or horizontally with copper cap facing downwards

Mounting Bracket Spacing:	RC20 Rail and high temperature sections	2 meter
	RC35 + 45 Rail	2.5 meter
Rail Spacing 'X':	to 550V	150 mm
	over	250 mm
Check alignment:	90° to mounting face and parallelity of the bracket spacing.	

2. Secure insulators/rail supports to brackets (in accordance with the mounting instructions) leaving bolts hand tight. For general arrangement see Fig A.
   When placing the conductors into the insulators, make sure that the bayonet clamp on the insulator does not lock down tight onto the rail. Check the height settings from the mounting bracket to the insulator head rail seat (dimension 'y') are precisely the same throughout the system. The rail must be able to move through the insulator bayonet clamp to allow for expansion and contraction. Check this after tightening down the insulators. The rail must not be restricted at any point otherwise it may buckle when in operation.

3. Connect the Rails by rigid or expansion joints using the holes provided at the ends of the 7m sections. See Fig. B + C on Pg 48
   With longer runs use an expansion joint after every 6 standard lengths of 7 m = 42m intervals.
   For special heat environment and strong temperature fluctuations reduce these intervals.
   For gap setting see diagram and example on Pg 48 Fig. D

   Provide an extra insulator/rail support either side of the expansion joint - maximum 250 mm eitherside.

5.4 INSTALLATION OF COPPERHEAD RAIL SYSTEM

Expansion Gap Calculation

The chart shows orientation lines for the different conductor rails, considering 42m expansion joint intervals. For gap setting move the orientation line in parallel up to the point presenting the anticipated maximum ambient temperature. Then connect point of actual ambient temperature during installation to the right until intersecting with the orientation line. Follow the vertical axis downward to read the air gap dimension in mm.

Example:

Ambient temperature 25ºC

Air gap F-rail = 19mm	Steel rail with copper cap
Air gap C-rail = 24mm	Solid copper rail
Air gap A-rail = 32mm	Aluminium rail with copper cap

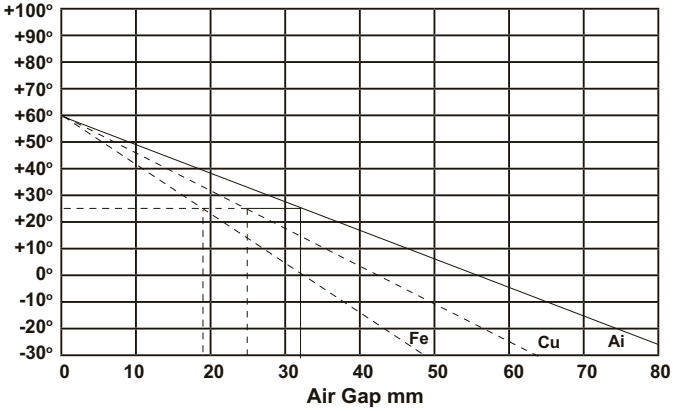

Fig. D

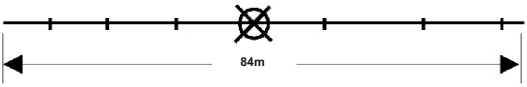

Fig. B

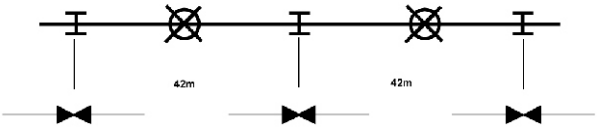

Fig. C

insulator with securing clamp
Rigid joints
Expansion joints

4. Anchor rails for controlled directional movement, by fitting two locating clamps around the centre insulator of the run or in the centre between two expansion joints (see Fig. B + C).

5. Install feeder clamps at feed points. Bolt to web of rail and braze to copperhead. (For improved conductivity). For short systems centerfeed power supply is recommended.